MAYEKAWA MYCOM

i-Series

Mini Screw Compressor

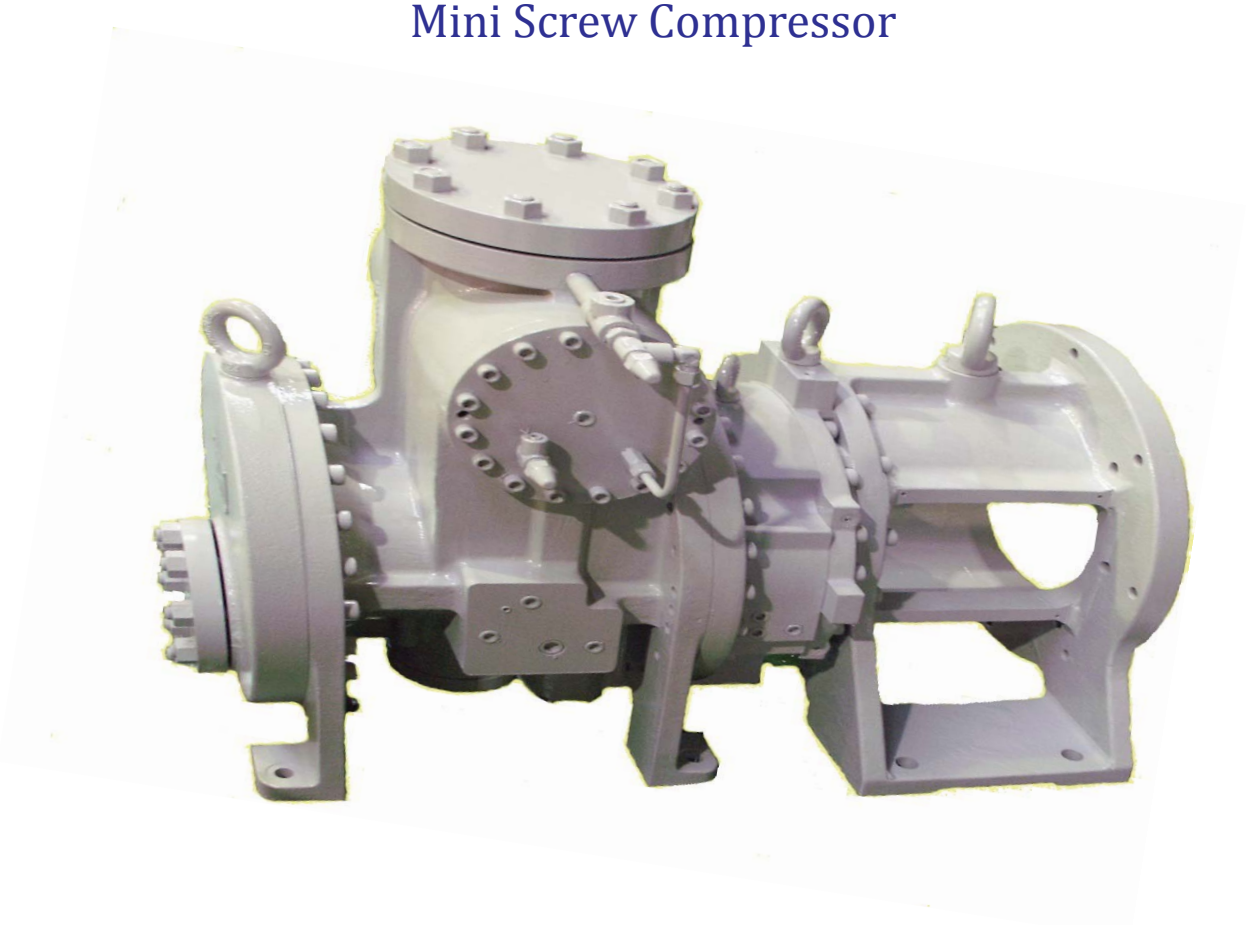

Do away with motor alignment

Flanged motor mounting eliminates the need of motor alignment before starting the equipment

3 - Step (100%, 75%, 50%) unloader

As it has a built in 3-step (100%, 75%, 50%) unloader mechanism, flow adjustment can be done easily. Speed control by inverter is

Built in suction strainer & check valve

This compressor has a built-in suction strainer & check valve which enables easy maintance

Simple structure allows innovative package design

Smart packaging is structured of the compressor which makes a simple piping design

No oil pump required

Oil pump only required with booster applications

High efficiency, less vibration & low noise

Use of Mayekawa original screw rotor profile attains high efficiency with less vibration and low noise

MINI SCREW COMPRESSOR i-SERIES

Specification

Items			Model				
			i125S	i125L	i160S	i160M	i160L
Single unit weight		kg	530	570	640	680	720
Motor connection	NEMA	-	C-FACE		D-FLANGE		
	IEC	-	FF400, FF500		FF600		
Standard speed 50Hz/60Hz		min^{-1}	2950/3550				
Rotation direction		-	Clockwise as viewed from motor				
Displacement 50Hz/60Hz		m^3/h	197/237	296/356	415/499	519/624	622/749
		CFM	116/139	174/210	244/294	305/367	366/441
Refrigerant		-	R717 / R404A / R507A / R134a				
Design pressure		MPa	2.6				
Capacity control		-	3-step (100%, 75%, 50%) unloader				
Connected pipe size	Suction flange	-	MYCOM 100A (4")		ANSI 300 # 5"		
	Discharge flange	-	MYCOM 65A (2-1/2")		ANSI 300 # 3"		
	Oil inlet port	-	Rc1/2		Rc1		
	Economizer	-	Rc3/8		Rc3/4		
	Aquamizer (Liquid injection)	-	Rc1/4		Rc1/2		

Capacity

Model	i125L				i160M			
Refrigerant	NH_3		R507A		NH_3		R507A	
Evaporating Temp. °C	Cooling Capacity (kW)	Absorbed Power (kW)	Cooling Capacity (kW)	Absorbed Power (kW)	Cooling Capacity (kW)	Absorbed Power (kW)	Cooling Capacity (kW)	Absorbed Power (kW)
0	274.2	53.4	268.5	63.3	497.3	92.8	487.4	110.0
-5	225.7	52.4	222.1	62.8	409.6	91.0	403.5	109.0
-10	183.3	50.3	182.2	62.2	332.9	87.5	331.3	108.2
-15	148.3	47.9	147.9	61.9	269.6	83.3	269.3	107.6
-20	118.5	45.9	119.5	59.1	215.6	79.8	217.9	102.7
-25	93.3	44.2	95.4	56.6	170.0	76.8	174.3	98.4

Model	L	W	H1	H2	H2 (w/o eyebolt)
	Dimension (mm)				
i125S	831	550	280	519	448
i125L	901	530	280	519	448
i160S	974	694	300	445	
i160M	1019	694	300	445	
i160L	1064	694	300	445	

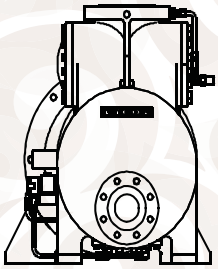

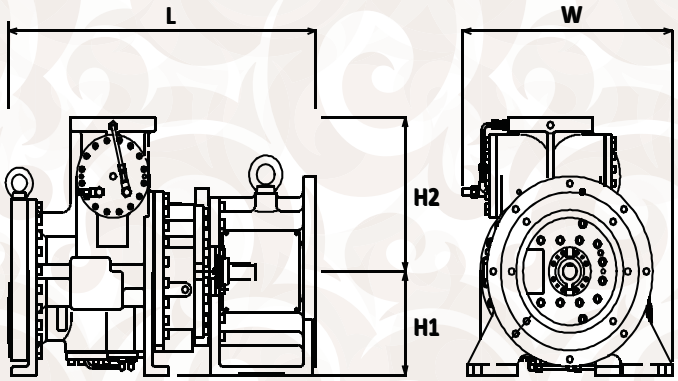

MAYEKAWA AUSTRALIA PTY. LTD.
www.mayekawa.com.au

☐ **SYDNEY OFFICE**
Unit 2, 44 McCauley Street, Matraville, NSW 2036, Australia
Tel: 02 9695 7000 Fax: 02 9695 7001

☐ **AUCKLAND OFFICE**
Unit 2, 30 Tui Street, Otahuhu, Auckland, New Zealand
Tel: 09 276 2305 Fax: 09 276 2306